the better way to heat

alpha innotec

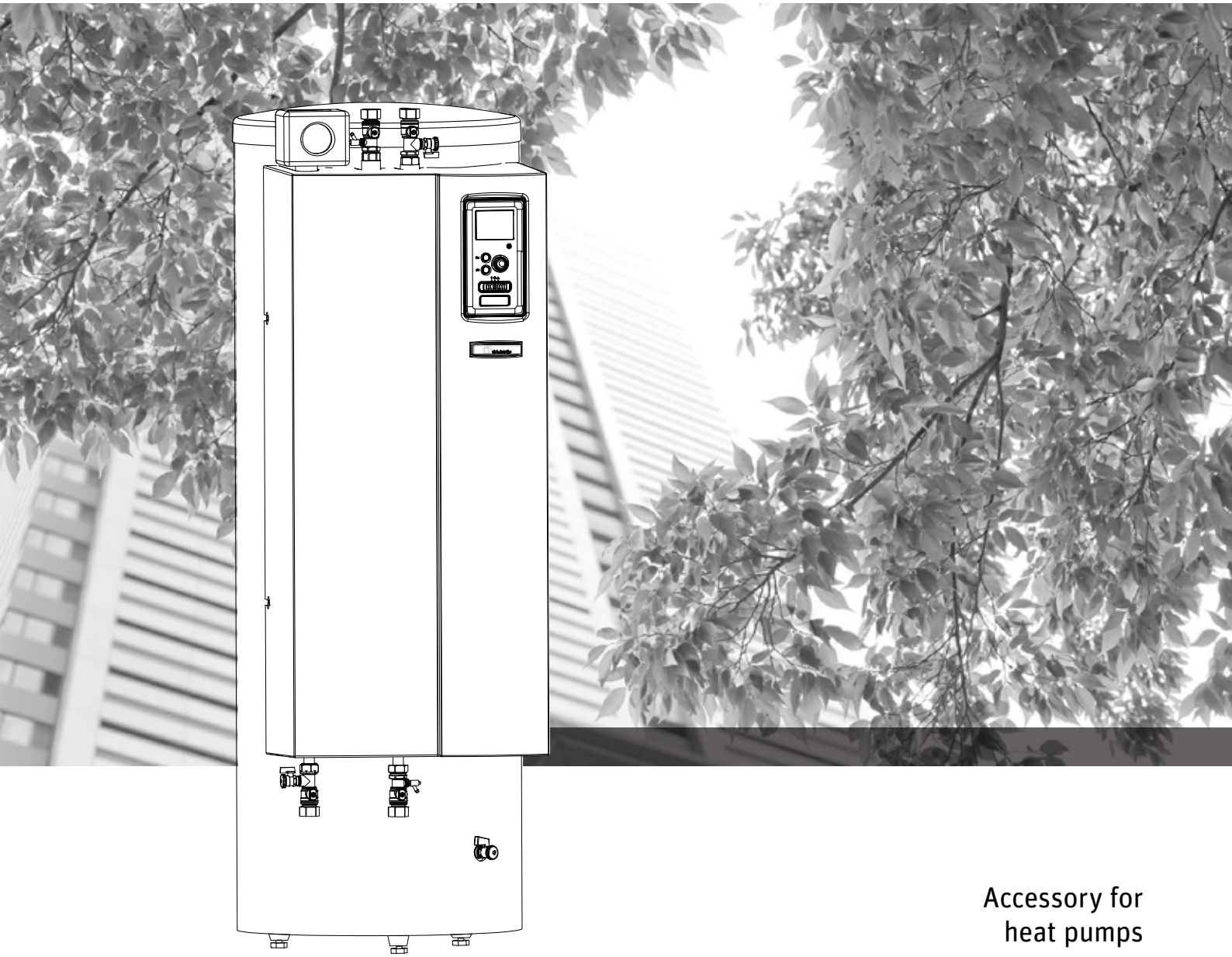

Accessory for
heat pumps

Operating Manual

Hydraulic tower HT 7

UK

83070100bUK

Contents

1 About this operating manual

This operating manual is part of the unit.

- ► Before working on or with the unit, always read the operating manual carefully and follow it for all activities at all times, especially the warnings and safety instructions.
- ► Keep the operating manual to hand by the unit, and give it to the new owner if the unit changes hands.
- ► If you have any questions or anything is unclear, ask the local partner of the manufacturer or the factory's customer service.
- ► Observe all reference documents.

1.1 Validity

This operating manual refers solely to the unit identified by the nameplate.

1.2 Reference documents

The following documents contain supplementary information for this operating manual:

- Planning & design manual, hydraulic integration
- Heat pump operating manual
- Heating and heat pump controller HPC operating manual
- Log book
- If necessary: operating manuals for accessories

Symbols and markings

Identification of warnings

Symbol	Meaning
⚠	Safety information. Risk of physical injury.
DANGER	Indicates imminent danger resulting in severe injuries or death.
WARNING	Indicates a potentially dangerous situation which may result in severe injuries or death.
CAUTION	Indicates a potentially dangerous situation which may result in moderate or minor injuries.
IMPORTANT	Indicates a potentially dangerous situation which may result in damage to property.

Symbols in the document

Symbol	Meaning
	Information for qualified personnel
	Information for the owner/operator
✓	Required action
▶	Procedural instructions: Individual step to take
1., 2., 3., etc.	Procedural instructions: Numbered series of steps, which should be taken in the listed order
ℹ	Additional information, e.g. advice for making work easier, information about standards
→	Reference to further information elsewhere in the operating manual or in another document
●	Bullet point
	Secure connections against twisting

1.3 Contact

Up-to-date addresses for purchasing accessories, for customer service or for answers to questions about the unit and this operating manual can be found online at:

- Germany: www.alpha-innotec.de
- EU: www.alpha-innotec.com

2 Safety

Do not use the unit if it has any technical defects. Only use it as intended, safely and aware of the hazards, and follow this operating manual.

2.1 Intended use

The unit is designed for household use and is solely intended for the following purposes:

- Heating
- Domestic hot water preparation
- Cooling (flow temperature of up to 18°C)
- Swimming pool heating (accessories)
- Integration of photovoltaic systems (accessories)

► Intended use includes complying with the operating conditions (→ "Technical data / Scope of supply", page 21) and the operating manual, as well as observing the reference documents.

► When using the unit, observe the local regulations, laws, standards, guidelines and directives.

Any other use of the unit is considered unintended use.

2.2 Personnel qualifications

The operating manual included in the Scope of supply is intended for all users of the product.

The product is intended for use by end customers / operators, and it can be operated (via the control panel) and worked on by persons of any age who understand the tasks and potential consequences, and who are able to carry out these necessary tasks.

Children and adults who are inexperienced with the product and who do not understand the tasks and potential consequences must be briefed and, if necessary, supervised by persons who know how to handle the product and who are responsible for safety.

Children must not play with the product.

The product may only be opened by qualified specialist personnel.

All procedural instructions in this operating manual are solely directed at qualified specialist personnel.

Only qualified specialist personnel are able to carry out work on the unit safely and correctly. Interference by unqualified personnel can cause life-threatening injuries and damage to property.

► Ensure that the personnel are familiar with the local regulations, especially those on safe and hazard-aware working.

► Ensure that the personnel are qualified to handle flammable (primary) refrigerant.

► Work on the refrigerating circuit may only be carried out by qualified personnel with appropriate qualifications for refrigeration system installation.

► Qualified personnel with electrical training are the only people permitted to work on the electrics and electronics.

► Other work on the system should only be carried out by qualified specialists, such as:
  - Heating engineers
  - Plumbers

During the warranty and guarantee period, servicing and repairs may only be carried out by personnel authorised by the manufacturer.

2.3 Personal protective equipment

During transport and work on the unit, there is a risk of cuts due to the sharp edges of the unit.

► Wear cut-resistant protective gloves.

During transport and work on the unit, there is a risk of foot injuries.

► Wear safety shoes.

When working on liquid-conveying lines, there is a risk of injury to the eyes due to leakage of liquids.

► Wear safety goggles.

2.4 Residual risks

Injuries caused by electric shock

Components in the unit are energised with life-threatening voltage. Before working on the unit:

► Disconnect unit from power supply.

► Protect unit against being switched back on again.

Existing earthing connections within housings or on mounting plates must not be changed. If this should nonetheless be necessary in the course of repair or installation:

► Restore earthing connections to their original state once repair or installation is complete.

Injuries caused by high temperatures

► Before working on the unit, let it cool down.

2.5 Avoiding damage to property

Improper action

Requirements for minimising scale and corrosion damage in hot water heating systems:

- Proper planning, design and commissioning
- Corrosion-resistant system
- Integration of an adequately dimensioned device for maintaining pressure
- Use of demineralised heating water or VDI 2035 equivalent water
- Regular servicing and maintenance

If a system is not planned, designed, started up and operated in accordance with these requirements, there is a risk that the following damage and malfunctions will occur:

- Malfunctions and failure of components, e.g. pumps, valves
- Internal and external leaks, e.g. from heat exchangers
- Restrictions and blockages in components, e.g. heat exchanger, pipes, pumps
- Material fatigue
- Gas bubbles and gas cushion formation (cavitation)
- Impaired heat transfer caused by formation of coatings, deposits etc., and associated noises, e.g. boiling noises, flow noises

► Observe the information in this operating manual for all work on and with the unit.

Impact of low-quality filling and top-up water in the heating circuit

The quality of the heating water is crucial for the efficiency of the system and the service life of the heat generator and the heating components.

If the system is filled with untreated drinking water, calcium deposits form as limescale on the heat transfer surfaces of the heating system. This reduces the unit's efficiency and increases energy costs. In extreme cases, this will damage the heat exchangers.

► Only fill the system with demineralised heating water or with VDI 2035 equivalent water (for low-salt operation of the system).

3 Operation and product care

NOTE
The unit is controlled via the control panel of the heating and heat pump controller HPC.

3.1 Energy-conscious and environmentally-conscious operation

The generally accepted requirements for energy-conscious and environmentally-conscious operation of a heating system also apply to use of a heat pump. The most important measures include:

- Avoid unnecessarily high flow temperatures
- Avoid unnecessarily high domestic hot water temperatures (observe and follow local regulations)
- Do not open windows with just a gap or tilt windows open (continuous ventilation), but instead open windows wide for a short time (shock ventilation).
- Ensure the controller settings are correct.

3.2 Product care

Wipe down the outside of the unit only using a damp cloth or a cloth with a mild detergent (washing-up liquid, neutral cleaning product). Do not use any harsh, abrasive, acidic or chlorine-based cleaning products.

4 Scope of supply

Example of Scope of supply packaging:

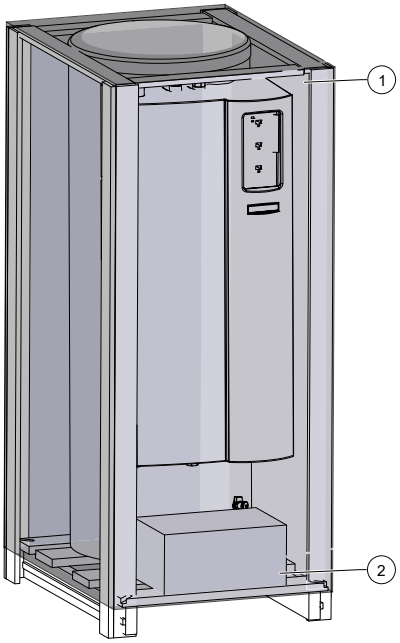

1 Compact unit (domestic hot water tank and buffer tank, without heat pump)
2 Separate package: Control panel of the heating and heat pump controller HPC, safety assembly, pump ball valves, indoor/outdoor temperature sensor RS (Split), adjustable feet, 230V connecting bridge (→ “Terminal diagram 1/2”, page 25)

1. Check the delivery for outwardly visible signs of damage.
2. Ensure everything has been delivered. Any defects or incorrect deliveries must be reported immediately.

4.1 Accessories

The following accessories are available for the unit through the manufacturer's local partner:

- Air / magnetic dirt separator
- Extension board EP (Split)
- Room station RS (Split)
- Photovoltaics communication and control unit PV (Split)
- Modbus (Split)
- Swimming pool heating IPP (Split)

4.2 Components of the unit

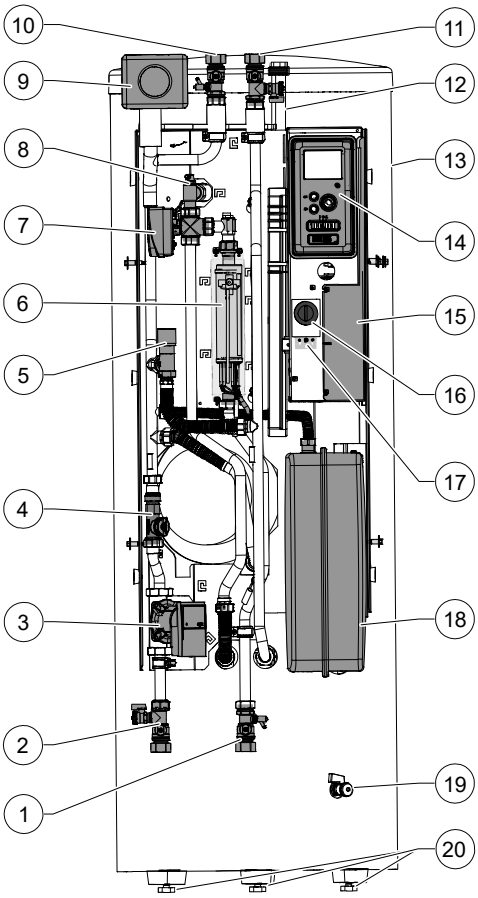

1 Shut-off ball valve with drain tap *)
2 Shut-off ball valve with filling and drain tap *)
3 Circulation pump for heating circuit
4 Flow sensor
5 Overflow valve
6 Electric heating element behind shielding plate
7 Switching valve for domestic hot water
8 Vent valve
9 Heating circuit safety assembly (insulated) *)
10 Shut-off ball valve for hot water inlet (return) *)
11 Shut-off ball valve for hot water outlet (supply) *)
12 Sacrificial anode
13 Domestic hot water tank and buffer tank
14 Control panel
15 Switch box
16 Thermostat for electric heating element
17 Safety temperature limiter
18 Expansion vessel
19 Draining for buffer tank
20 Adjustable feet *)

*) to be installed at the installation site

5 Storage, transport and installation

5.1 Storage

► Store the unit so that it is protected against:

- Moisture/damp
- Frost
- Dust and dirt

5.2 Unpacking and transport

Safe transportation of the unit

The unit is heavy (→ “Technical data / Scope of supply”, page 21). There is a risk of injuries or damage to property if the unit is dropped or knocked over.

There is a risk of cutting your hands on sharp edges of the unit.

► Wear cut-resistant protective gloves.

The hydraulic connections are not designed for mechanical loads.

► Do not lift or transport the unit by the hydraulic connections.

5.2.1 Transport with a pallet truck

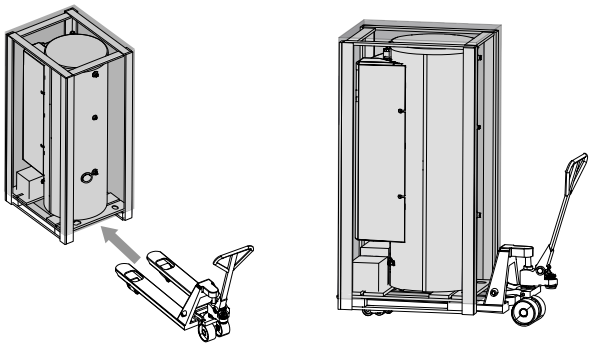

5.2.2 Unpacking

1. Remove the plastic films. Ensure that you do not damage the unit in the process.
2. Dispose of the transport and packaging material in an environmentally-friendly manner and in accordance with local regulations.
3. Remove the film from the plastic element of the front panel at the installation site.

We recommend that you do not remove the wooden pallet if still carrying the unit.

5.2.3 Facilitating transport

To make the unit lighter and easier to transport, the entire hydraulics (including controller with switch box) can be unscrewed at the front.

1.

Right-hand side: Left-hand side:

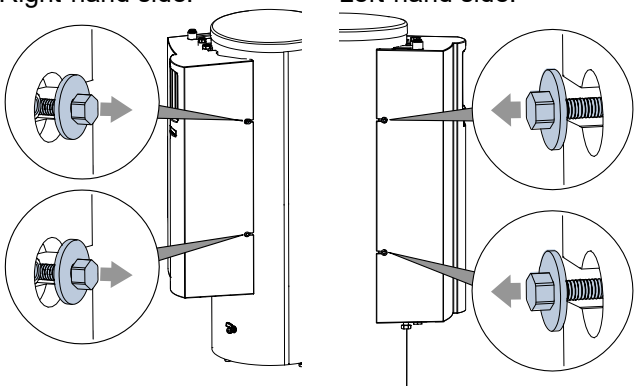

2.

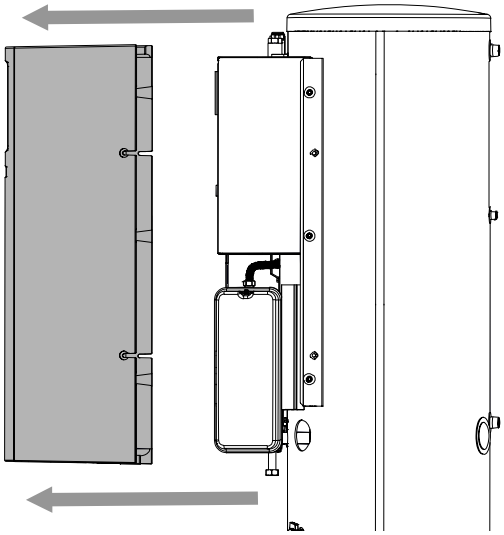

3. Disconnect the domestic hot water temperature sensor (BT6) inside the switch box and withdraw the sensor cable out of its grommet in the switch box.

   Opening and closing the switch box:

→ „7.2 Electrical connection“, page 13

   Terminals for the domestic hot water temperature sensor:

→ „Circuit diagram 2/2“, page 29

4.

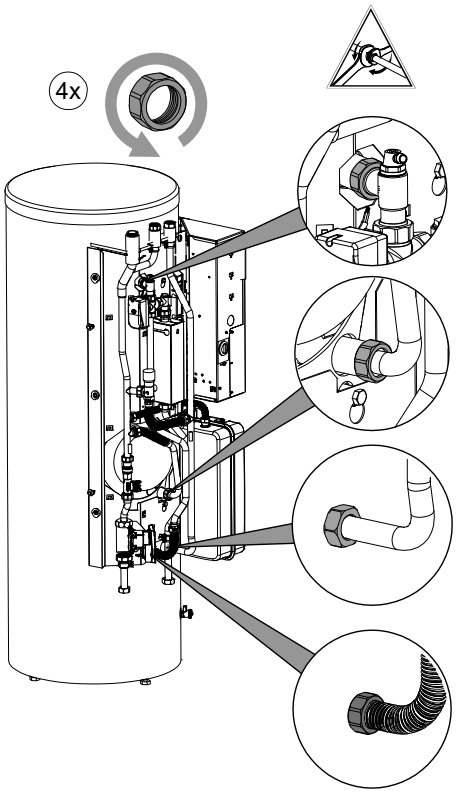

5.

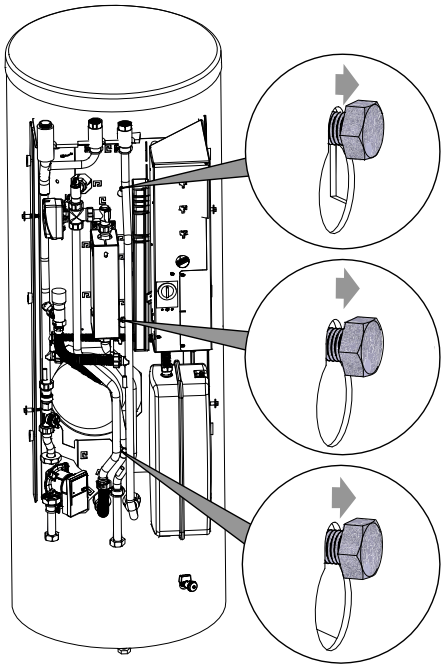

6.

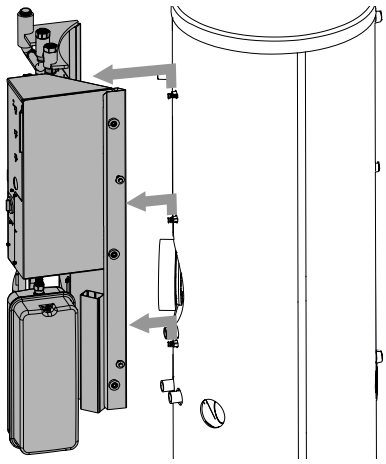

IMPORTANT
When lifting off the hydraulic system, withdraw the cable of the domestic hot water temperature sensor through its grommet in the support plate and place it behind the support plate. Be careful not to damage the cable.

7. Re-attach the hydraulics and hood after aligning the unit.

→ “5.5 Installation”, page 9

5.3 Transport with handcart

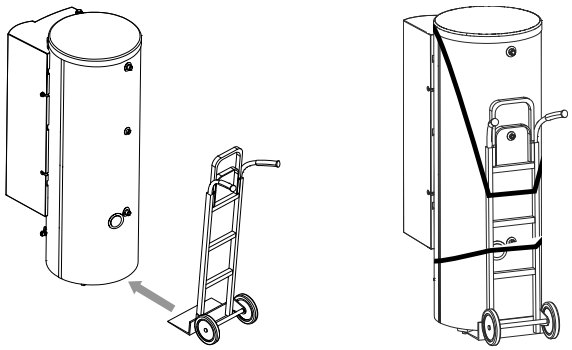

IMPORTANT
Do not damage the hydraulic connections on the rear of the unit, the hood on the hydraulics or the insulation for the domestic hot water tank and buffer tank.

5.4 Carrying the unit

To make it easier to carry, a T-piece with two double nipples can be installed on the domestic hot water outlet. We recommend that you only remove the wooden pallet after carrying the unit.

► Carry the hydraulic tower HT 7 with 3-4 people to the installation site.

5.5 Installation

Installation site

IMPORTANT
Install the unit inside buildings only.

The installation area must be frost-free and dry. It must meet the relevant local regulations.

→ “Installation plans”, page 24, and “Dimensional drawings”, page 23

1. Place the unit on a stable, solid and horizontal surface, preferably with structural sound insulation.
2. Tilt the unit slowly and carefully from one side.
3. Secure the unit raised at an angle so that it cannot accidentally tilt back to the initial position.
4. Install the adjustable feet (①) on all 3 feet.

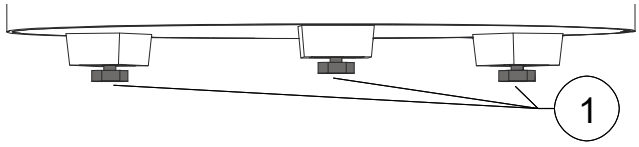

5. Tilt the unit back to the initial position slowly and carefully.
6. Adjust the 3 adjustable feet so that they are balanced.
7. If the hydraulics have been removed for transport reasons, screw the hydraulics back on to the tank.

7.1.

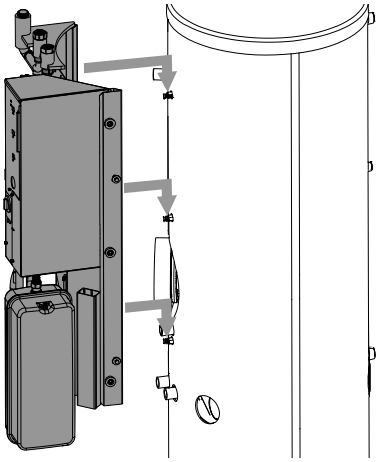

IMPORTANT
When mounting the hydraulic system, insert the cable of the domestic hot water temperature sensor through its grommet into the support plate. Take care not to damage the cable.

7.2.

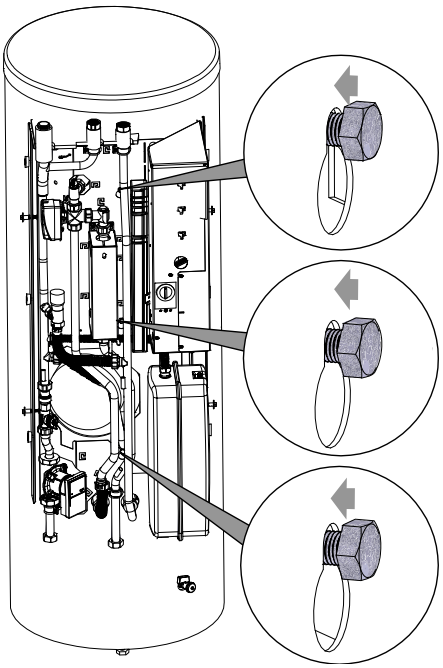

7.3.

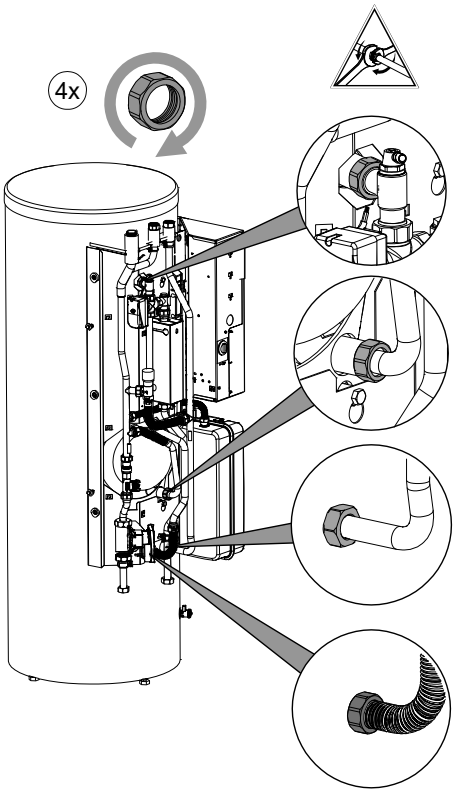

8. Feed the cable of the domestic hot water temperature sensor (BT6) through its grommet into the switch box and connect it.

   Opening and closing the switch box:

→ „7.2 Electrical connection“, page 13

   Terminals for the domestic hot water temperature sensor:

→ „Circuit diagram 2/2“, page 29

9. If no further hydraulic or electrical work is being carried out for the time being, put the hood on the hydraulics.

9.1.

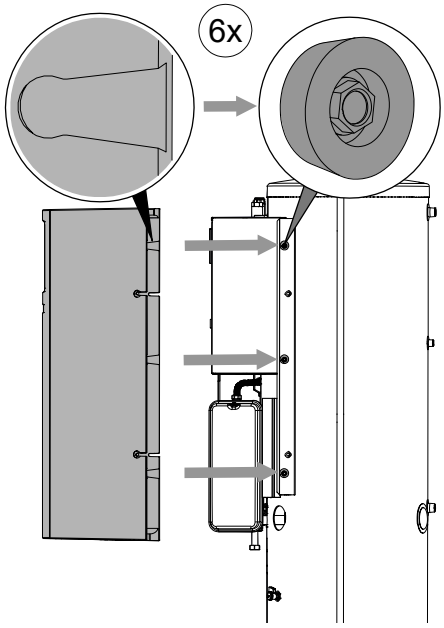

9.2.

Right-hand side: Left-hand side:

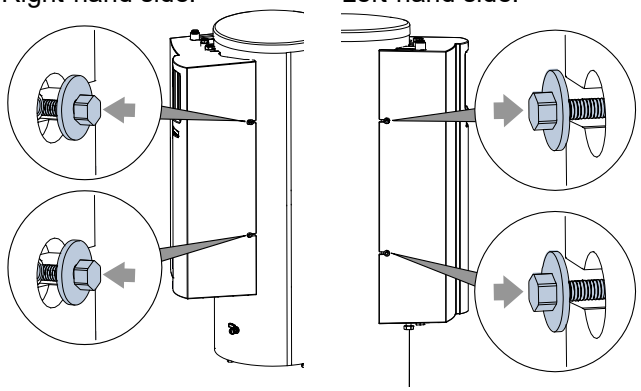

6 Hydraulic connection to heating circuit and domestic hot water

IMPORTANT

Dirt and deposits in the hydraulic (existing) system can lead to damage to the unit.

► Ensure that a dirt separator is installed in the hydraulic system.

► Thoroughly rinse the hydraulic system before connecting the unit hydraulic system.

IMPORTANT

Improper loading will damage the copper pipes!

► Secure all connections against twisting.

✓ Cross-sections and lengths of the pipes for the heating circuit must be adequately dimensioned. In doing so, it is essential to take into account the connection cables between the heat pump and the hydraulic tower HT 7.

✓ The free compression of the circulation pump must produce at least the minimum throughput required for the unit type (→ “Free compression”, page 22).

► Route all hydraulic connection cables as fixed piping and attach them via a fixed point to the wall or ceiling at a maximum distance of 20 cm from the centre of the respective unit connection.

► Insert vents at the highest points of the heating circuit.

► Take off the hood at the front of the hydraulic tower HT 7 (→ “5.2.3 Facilitating transport”, page 7).

6.1 Heating circuit

Safety assembly and shut-off ball valves

1. Remove the safety assembly and shut-off ball valves from the separate package and install them on the connections provided for this purpose.

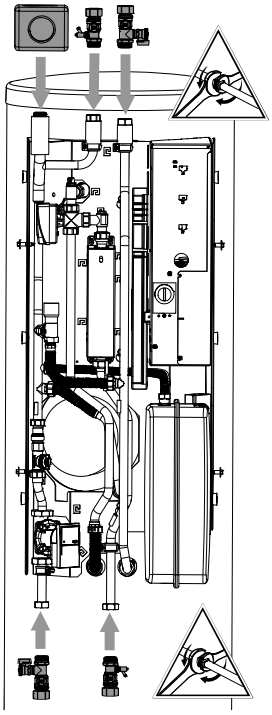

2. Lay the safety discharge of the safety valve into the drain via a funnel waste trap according to the relevant standards and guidelines.
   It is essential that the safety discharge is connected.

Heating water inlet and outlet

1. Establish the hydraulic connection to the unit.
2. Establish the hydraulic connection to the heating circuit.

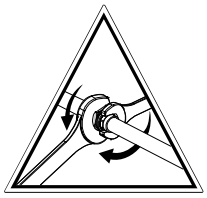

→ Position of the connections: “Dimensional drawings”, page 23

6.2 Expansion vessel

The expansion vessel for the heating circuit is integrated.
Always check whether the expansion vessel is large enough for the system. If necessary, an additional expansion vessel must be installed on site according to the relevant standards.

NOTE
The initial pressure of the expansion vessel must be adjusted to the system (approx. 0.5 bar less than the system filling pressure) as calculated in accordance with the relevant standards (EN 12828).

6.3 Hydraulic connection of the domestic hot water tank

Connect the domestic hot water tank in accordance with DIN 1988 and DIN 4753 Part 1 (or the relevant local standards and guidelines).

→ Position of the connections: “Dimensional drawings”, page 23

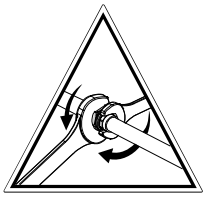

Do not exceed the operating pressures indicated on the nameplate. Install a pressure reducer if necessary. The sensor for domestic hot water preparation is already clamped in the switch box.

IMPORTANT
The electrical conductivity of the domestic hot water must be > 100 µS/cm and must be of the required quality for drinking water.

7 Electrical installation

IMPORTANT
An incorrect rotating field will cause irreparable damage to the compressor.

► Ensure that there is a clockwise rotating field for the compressor load in-feed.

Basic electrical connection information

- The specifications of the local energy supply company may apply to electrical connections.
- Equip the power supply for the heat pump with an all-pole circuit breaker with at least 3 mm contact spacing (according to IEC 60947-2)
- Observe the level of the tripping current (→ “Technical data / Scope of supply”, page 21)
- Comply with the electromagnetic compatibility (EMC) regulations
- Lay power supply cables and communication cables sufficiently far apart (> 100 mm)
- Cable on site
  Permitted type of communication cable:
  3 x 0.75 mm², (LiYY, EKKX or equivalent),
  maximum cable length: 20 m
  For the hydraulic tower HT 7 load cable:
  One 3 x 2.5mm² cable with protective conductor, diameter of sheath cable 10 mm
  For the electric heating element load cable:
  One 5 x 2.5mm² cable with protective conductor, diameter of sheath cable 9-13 mm

7.1 Preparatory work

Installation of outdoor sensors (required)

IMPORTANT
Install one of the RS (Split) sensors supplied with the unit on the north or north-east side of buildings. RS (Split) must not be exposed to direct sunlight and must be installed so that it is protected from rain. The cable entry into the housing must point towards the ground.

1. Open the RS (Split) housing and align ≥ 2 m above the ground at a suitable mounting point.
2. Mark and drill mounting holes. Hammer down the wall plugs and screw the housing with cable entry down to the wall.
3. Close the housing.

IMPORTANT
Moisture must no be trapped in the housing. If necessary, completely drain the inside of the housing before installing the housing cover.
Make sure that the housing is leaktight as a result of the zero potential installation and that water cannot penetrate the housing at any time (for example, during the construction stage). Seal any existing cable ducts.

4. Route the sensor cable to the inside of the building and to the electrical switch box of the hydraulic tower HT 7.
5. Connect the sensor cable as BT 1 (outdoor sensor).

→ “7.2 Electrical connection”, from page 13

Installing a room temperature sensor (optional)

NOTE
The control system works without a room temperature sensor. However, in order to read the current indoor temperature on the display of the control panel and to change the room temperature via the control system, a room temperature sensor must be installed and activated in the control system menu.

1. Install RS (Split) in a neutral location where the set temperature is desired.

An example of a suitable location is a free interior wall in the hall and approx. 1.5 m from the floor.

NOTE
The sensor must not be prevented from measuring a correct room temperature – for example, by placing it in a niche, between shelves, behind a curtain, above or near a heat source, in a draught area of the external door or in direct sunlight. Closed radiator thermostats can also cause problems.

Changes of temperature in the home take time. For example, switching underfloor heating on for a short period of time will not lead to a noticeable change in room temperature.

If the RS (Split) is placed in a room with underfloor heating, it should only have a display function and no control function for the room temperature.

2. Route the sensor cable to the electrical switch box of the hydraulic tower HT 7.
3. Connect the sensor cable as BT 50 (room sensor) according to the terminal diagram.

→ “Terminal diagram 2/2”, page 26

4. Activate the room temperature sensor later in menu 1.9.4 of the heating and heat pump controller HPC.

NOTE
If there are multiple heating circuits, we recommend that you use the RS (Split) accessories for each individual heating circuit.

Network cable (optional)

There is the option of connecting the control panel to a computer or a network in order to control the heating and heat pump controller HPC from there.

► Route a shielded network cable (category 6, with RJ-45 plug) through the unit to the electrical switch box.

7.2 Electrical connection

The electrical connection is established via the electrical switch box.

1. Insert the control and sensor cables, the load and communication cable from the heat pump, the cable for the EVU lock and all cables for external consumers through the grommet on the rear of the unit (①) into the inside of the unit.

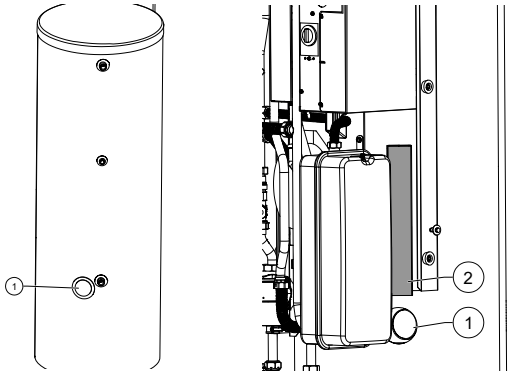

2. Route the cable through the cable duct (②) to the electrical switch box.
3. Open the side cover (②) of the electrical switch box.

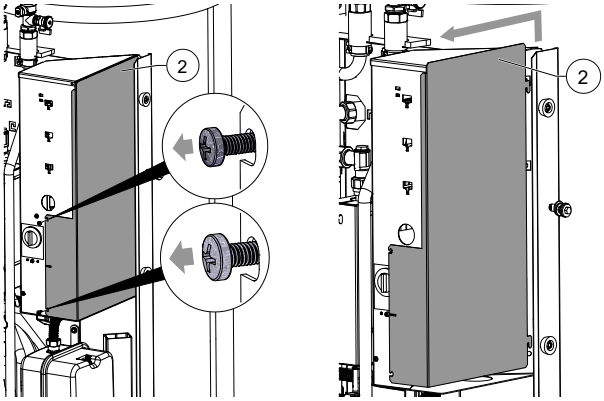

4. Strip the cable before inserting it into the electrical switch box (strip 6mm of each of the individual wires).
5. Route the cable through the openings in the bottom of the electrical switch box to the terminals in the electrical switch box.
6. Connect the outdoor sensor (BT1) to terminal AA3-X6:1-2.

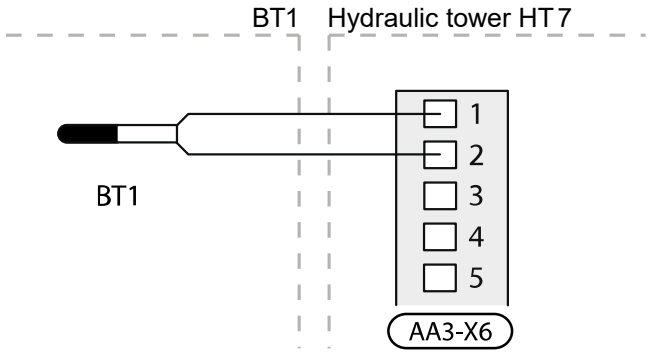

7. Make further connections as shown in the terminal diagrams.

→ “Terminal diagrams”, from page 25

The hydraulic tower HT 7 is connected on site according to the following schematic diagram:

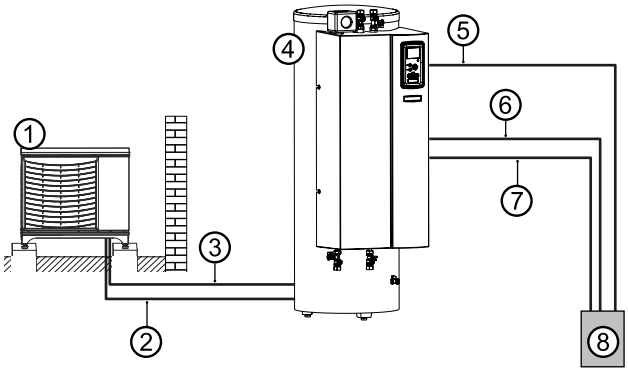

1 Heat pump
2 Load compressor
3 Communication cable
4 Hydraulic tower HT 7
5 Load cable of heating element
6 Control voltage of the heating and heat pump controller HPC
7 Load compressor
8 Sub-distribution / Main power supply

8. Secure all cables inserted into the switch box with strain relief in the electrical switch box and route plug-in connections for the control panel out of the opening (③) in the front cover of the electrical switch box.

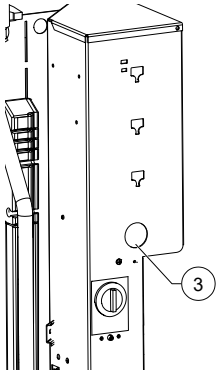

9. Close the electrical switch box by re-attaching the side cover.

8 Installing the control panel

1. Remove the control panel from the separate package and hang it on its 3 hooks in the switchgear compartment panel.
2. Press the control panel downwards until the lock (①) snaps into the lower groove (②) on the switchgear compartment panel.

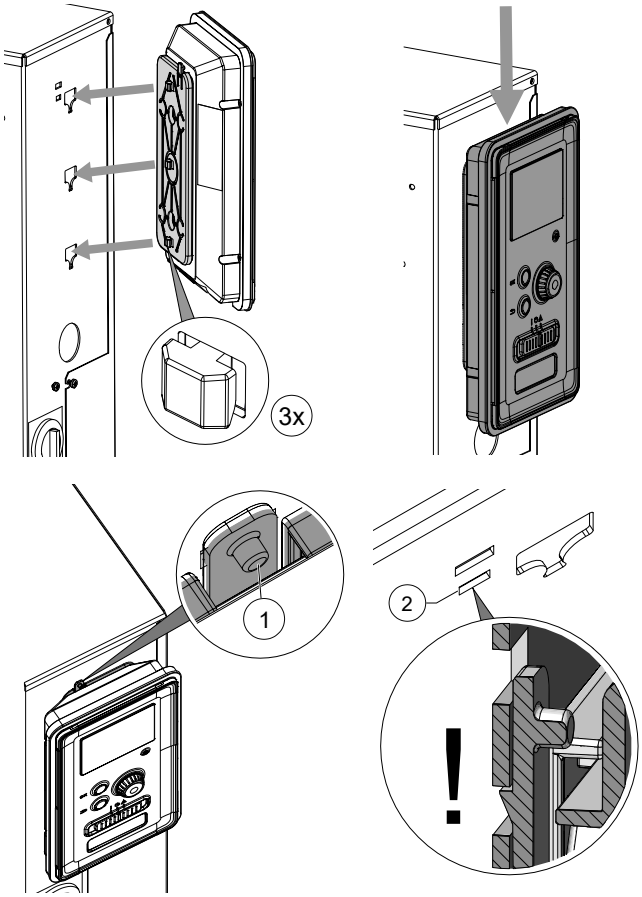

3. Insert the plug into the corresponding socket at the bottom of the control panel.

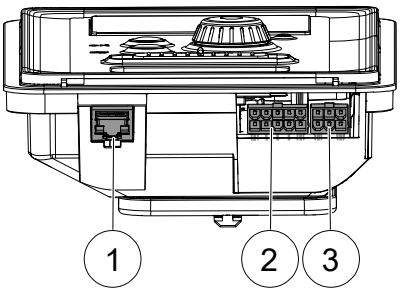

1 RJ45 female connector (AA4-X9) for network cable (optional)
2 Socket (AA4-X8) for 10-pin plug of terminal block AA3-X2
3 6-pin plug socket (remains unoccupied)

Dismantling the control panel

1. Insert the small slotted screwdriver from above into the upper lock (③) and press on the handle in the direction of the control panel until the lock of the control panel is released from its anchoring.

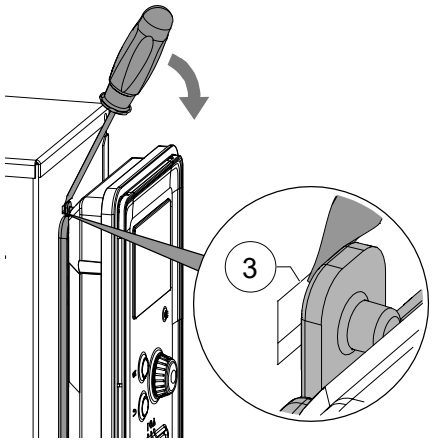

2. Lift the control panel upwards first, and then forward from the hook brackets.
3. Disconnect the plug-in connections from the control panel.

9 Flushing, filling and venting

9.1 Heating water quality

NOTE

- For detailed information, see also the VDI Guidelines 2035 "Vermeidung von Schäden in Warmwasserheizanlagen" (preventing damage in hot water heating systems).
- Required pH value: 8.2-10;
  For aluminium materials:
  pH value: 8.2-8.5

► Only fill the system with demineralised heating water or with VDI 2035 equivalent water (for low-salt operation of the system).

Advantages of low-salt operation:

- Minimal corrosion
- No formation of mineral scale
- Ideal for closed heating circuits
- Ideal pH value due to self-alkalisation after filling the system

► If the required water quality is not achieved, consult a company that specialises in treatment of heating water.

► It is advisable to keep a system log for hot water heating systems containing the relevant planning & design data (VDI 2035).

Anti-freeze in the heating circuit

For air/water heat pumps installed outdoors, it is not necessary to add a water-antifreeze mixture into the heating circuit.
The heat pumps have safety devices which prevent the water from freezing even when the heating is switched off. The prerequisite is that the heat pump remains switched on and is not disconnected from the power supply. If there is a risk of frost, the circulation pumps are activated.

If the heating circuit is filled with anti-freeze, and depending on the concentration of the mixture, the following points must be observed:

- The heating capacity of the heat pump is reduced
- The COP value becomes worse
- The output of circulation pumps used on site is reduced, and the specified free compression for integrated circulation pumps decreases
- You must ensure the materials in the components used are compatible with the anti-freeze mixture

9.2 Flushing and filling the heating and domestic hot water charging circuit

✓ The outlet pipe of the safety valve must be connected.

► Ensure that the set pressure of the safety valve is not exceeded.

1. Vent the system at the highest point in each case.
2. Vent the heat pump on the hydraulic connection set.
3. Open the vent valve (①) on the 3-way switching valve.

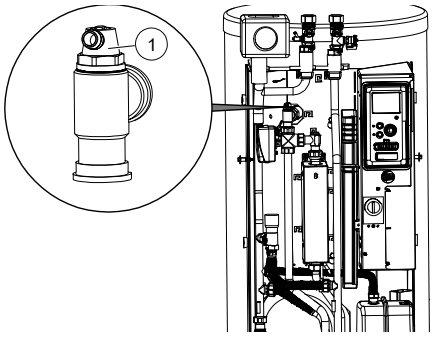

4. Pull the U-clip (②) on the rear of the valve motor (③) upwards on the 3-way switching valve.

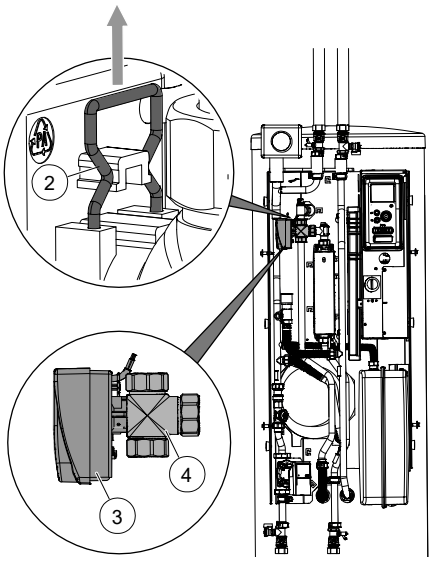

5. Pull the valve motor (③) forward carefully from the 3-way switching valve (④).

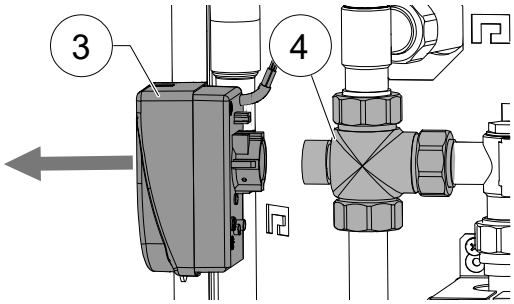

6. Turn the spindle of the 3-way switching valve so that the rounded side of the spindle points towards marking A of the connections of the 3-way switching valve.

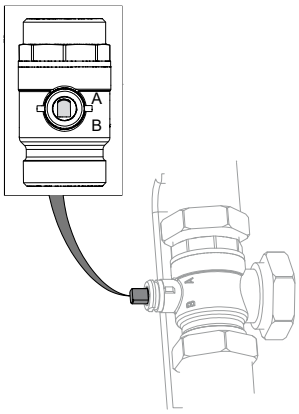

7. Flush the domestic hot water charging circuit for approx. 1 minute.
8. Turn the spindle so that the rounded side of the spindle points towards marking B of the connections of the 3-way switching valve.
9. Flush the heating circuit thoroughly, until no more air is discharged.
10. Position the valve motor (③) on the 3-way switching valve (④).

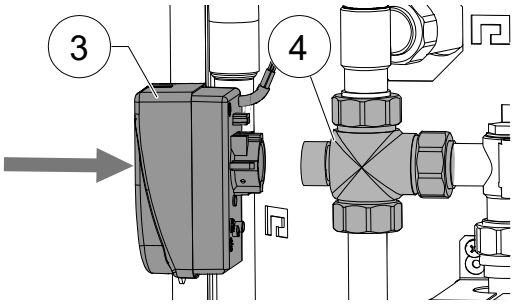

11. Insert the U-clip (②) on the rear of the valve motor (③).

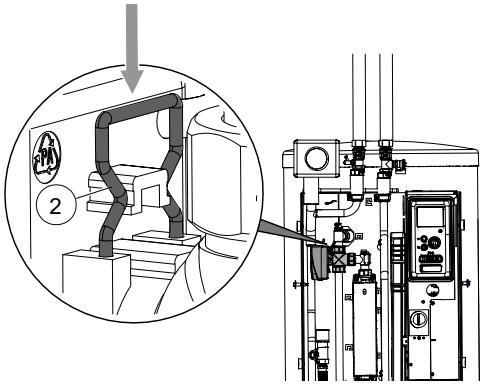

12. Ensure that the U-clip has latched into position correctly:
    - ✓ The valve motor must sit securely on the 3-way switching valve
    - ✓ Both prongs of the U-clip must sit on the lug
    - ✓ You must be able to see no more than approx. 2 mm of the tips of the U-clip
13. Close the vent valve (①) on the 3-way switching valve.

9.3 Flushing, filling and venting the domestic hot water tank

IMPORTANT
Before flushing and filling the domestic hot water tank, the outlet pipe of the safety valve must be connected. The set pressure of the safety valve must not be exceeded.

1. Open the domestic cold water inlet valve on the domestic hot water tank.
2. Open the domestic hot water valves on the taps.
3. Flush the domestic hot water tank until air is no longer discharged from the valves on the taps.
4. Close the domestic hot water valves on the taps.

10 Insulating hydraulic connections

Insulate hydraulic lines in accordance with local regulations.

1. Open shut-off devices.
2. Perform a pressure test and check for leaks.
3. Insulate external piping on site.
4. Insulate all connections, fittings and pipes.

11 Commissioning

► Place the hood on the hydraulics of the unit before connecting the power supply of the unit and commissioning (→ "5.2.3 Facilitating transport", page 7).

Check that:

✓ The water supply to the domestic hot water tank is open

✓ The domestic hot water tank and heating circuit are filled

✓ All shut-off devices on the unit are open

✓ All vent valves are completely closed

✓ The safety temperature limiter has not tripped (→ "14.1 Unlocking the safety temperature limiter", page 19)

✓ Hydraulic installation and electrical connection work have been carried out properly.

► Follow the instructions for commissioning in the heating and heat pump controller HPC operating manual.

→ Heating and heat pump controller HPC operating manual, "Commissioning and setting" section

12 Overflow valve

The overflow valve adjustment procedure should be performed as follows during system startup:

1. Open the overflow valve (①) completely.
   Turn the adjusting knob (②) on the overflow valve to the right to increase the temperature difference (the temperature drop), and turn it to the left to reduce it.

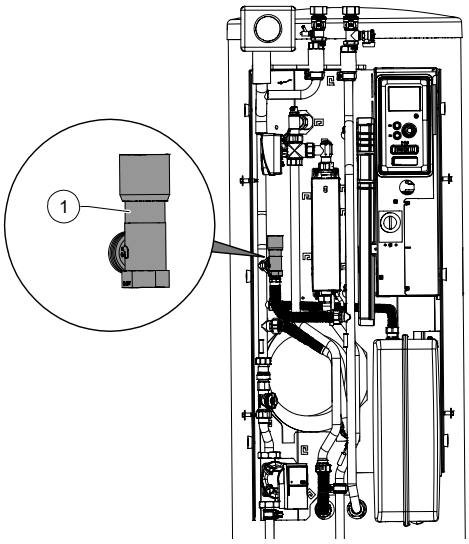

2. Close the flow on all heating circuits after the overflow valve.
3. Go to menu 5.6 "Forced control" and manually set the speed of the feed pump to 100%.
4. Continue to menu 3.1.11.
5. Close the overflow valve by a quarter of a turn at one-minute intervals, while checking the flow rate indicator in menu 3.1.11. When the "Minimum flow during defrosting" value is reached, close the overflow valve fully.
6. In menu 5.6 "Forced control", open the heating circuits again and set the circulation pump to automatic operation.

13 Volumetric flow meter / Heat meter

The integrated volumetric flow meter / heat meter (①) is used to measure the heat quantity generated by the heating system and made available for domestic hot water preparation and building heating.

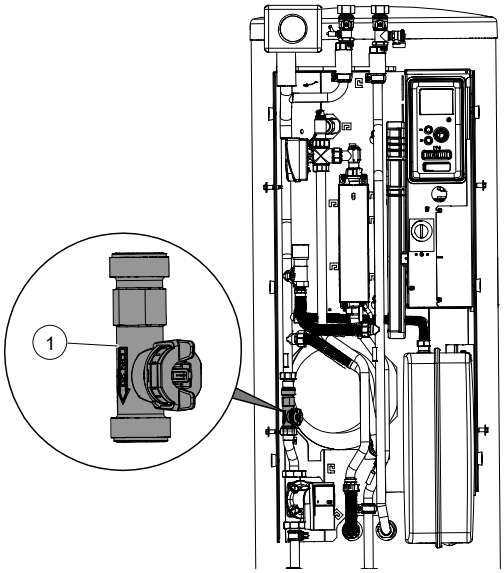

The volumetric flow meter / heat meter measures flow and temperature difference in the charging circuit. The measuring ranges are set in the heating and heat pump controller HPC. Measured values can be read out on the control panel display.

→ Heating and heat pump controller HPC operating manual, menu 5.3.21

14 Malfunctions

14.1 Unlocking the safety temperature limiter

A safety temperature limiter is installed in the electrical switch box. If the heat pump fails or there is air in the system:

► Check whether the Reset button (①) on the safety temperature limiter has tripped.

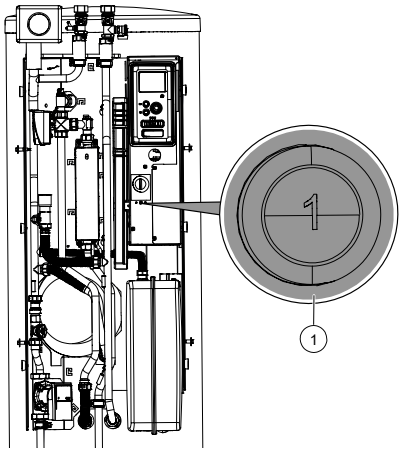

ℹ **NOTE**
The safety temperature limiter interrupts the power supply from the electric heating module when the temperature rises to approx. 98°C or drops below -8°C.

► If the Reset button has tripped, press it again with a little force using a small screwdriver.

► If the safety temperature limiter trips again, contact the local partner of the manufacturer or the factory's customer service.

14.2 Alarm

→ Heating and heat pump controller HPC operating manual, “Comfort malfunction” section

14.3 Emergency operation

→ Heating and heat pump controller HPC operating manual, “Comfort malfunction” section

Thermostat for emergency operation

In emergency operation, the flow temperature is set via the electric heating element thermostat (①) according to the needs of the heating circuits in operation.
Adjustment range: 40°C – 80°C
Factory setting: Stop on left-hand side = frost protection

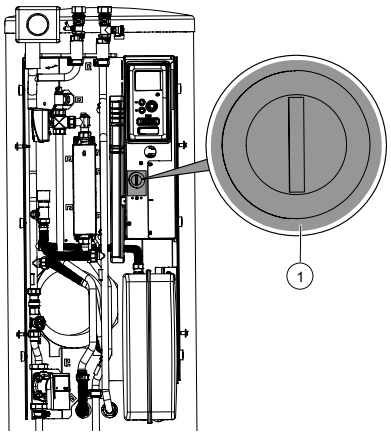

► Set the temperature of the thermostat to the designed heating system.

IMPORTANT
Setting the temperature too high can damage the insulation and the heating system.

ℹ **NOTE**
The maximum available heating capacity in emergency operation is 2 kW.

15 Dismantling and disposal

15.1 Dismantling

► Separate components by their materials.

15.2 Disposal and recycling

► Recycle unit components and packaging materials in accordance with local regulations, or ensure they are disposed of properly.

Technical data / Scope of supply

Accessories for heat pump type					Hydraulic tower HT 7
Air/water output-controlled	Indoor and outdoor installation	4 kW | 8 kW | 12 kW	• yes	– no	– | – | –
Air/water dual output-controlled	Outdoor installation	9 kW	• yes	– no	–
Air/water output-controlled	Outdoor installation	5 kW | 7 kW	• yes	– no	• | •
Air/water	Outdoor installation	14 kW | 18 kW	• yes	– no	– | –
Air/water Dual	Outdoor installation	5 kW | 7 kW | 9 kW	• yes	– no	– | – | –
Installation location					
Room temperature		min. | max.		°C	5 | 35
Relative humidity maximum (non-condensing)				%	60
Sound					
Sound pressure level at 1 m distance		inside		dB(A)	35
Sound power level		inside		dB(A)	40
Heating circuit					
Flow rate: minimum | maximum (see heat pump for pipe dimensioning)				l/h | l/h	350 | 1400
Free pressing | Pressure loss | Flow rate				bar | bar | l/h	0.509 | - | 1200
Max. allowable operating pressure				bar	3
Circulation pump control range		min. | max.		l/h	350 | 1400
General unit data					
Total weight				kg	150
Weight of individual components				kg | kg | kg	– | – | –
Domestic hot water tank					
Net volume				l	180
Magnesium sacrificial anode	Impressed current | Magnesium		• yes	– no	– | •
Domestic hot water temperature, heating pump mode | Electric heating element				up to °C | up to °C	55 | 60
Mixed water quantity according to ErP: 2009/125/EC (at 40 °C, draw-off of 10 l/min)				l	230
Standing loss according to ErP: 2009/125/EC (at 65 °C)				W	55
Maximum pressure | Operating pressure				bar | bar	6 | 10 | 13
Electrics					
Voltage code | all-pole fuse protection for heat pump *)**)		1 phase		… | A	1~N/PE/230V/50Hz | B16
Voltage code | all-pole fuse protection for heat pump *)**)		3 phases		… | A	– | –
Voltage code | Control voltage fuse protection **)				… | A	1~N/PE/230V/50Hz | B10
Voltage code | Electric heating element fuse protection **)		1 phase		… | A	1~N/PE/230V/50Hz | B32
Voltage code | Electric heating element fuse protection **)		3 phases		… | A	3~N/PE/400V/50Hz | B10
Degree of protection				IP	10B
Zmax				Ω	-
Residual current circuit breaker		if required		type	-
Electric heating element output		3 | 2 | 1 phase		kW | kW | kW	6 | 4 | 2
Circulation pump power consumption, heating circuit		min. | max.		W	4 | 75
Other unit information					
Safety valve Heating circuit | Response pressure		included in scope of supply:	• yes	– no | bar	• | 3
Buffer tank | Volume		included in scope of supply:	• yes	– no | l	• | 62
Diaphragm expansion vessel Heating circuit | Volume | Prepressure		incl. in scope of supply:	• yes	– no | l | bar	• | 12 | 1.5
Overflow valve | Changeover valve, heating - domestic hot water		integrated:	• yes	– no	• | •
Vibration decoupling, Heating circuit | Heat source		included in scope of supply or integrated:	• yes	– no	–
Controller | Heat quantity recording | Extension board		included in scope of supply or integrated:	• yes	– no	• | • | –

*) compressor only, **) note local regulations I Index: k

813328

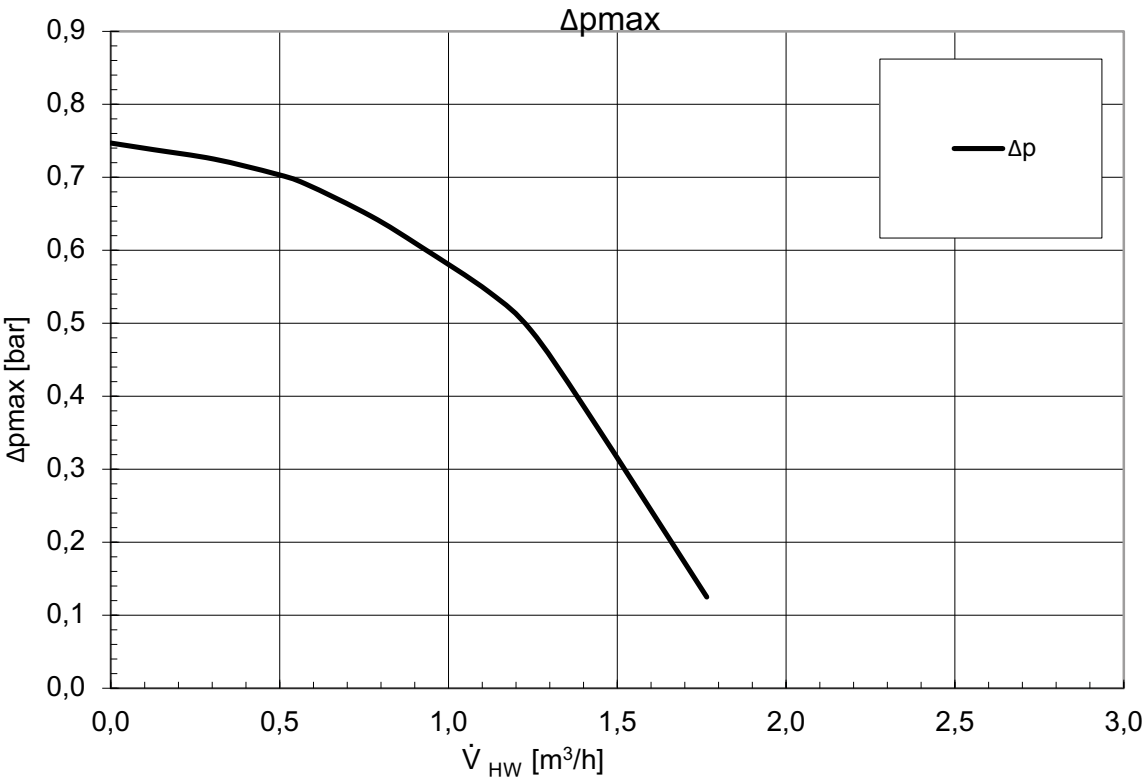

Key: UK823324

$\dot{V}_{HW}$	Volume flow heating water
Δpmax	maximum free pressure

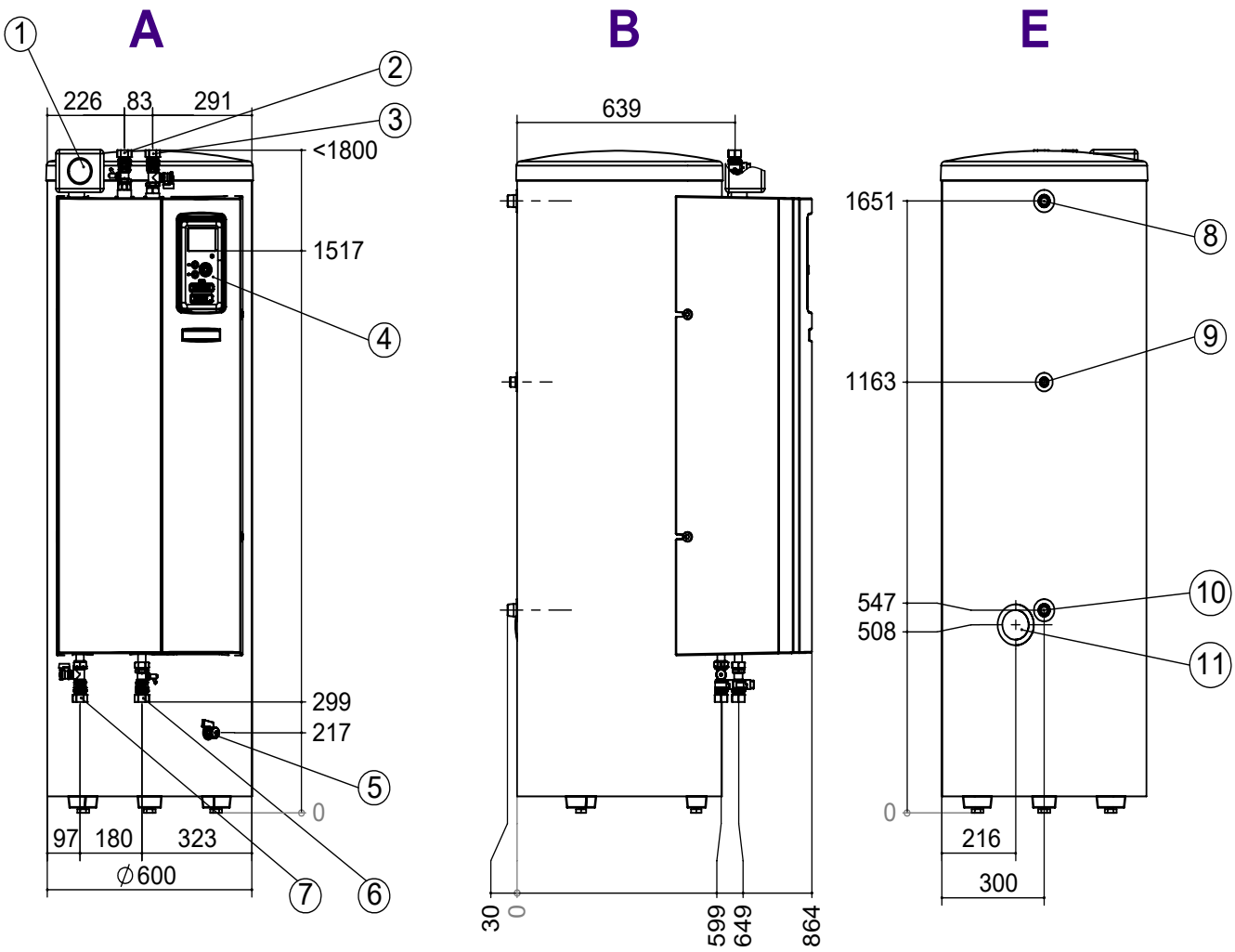

Key: UK819525
All dimensions in mm.

Item	Name	Dim.
A	Front view	
B	Side view from the left	
E	Rear view	
1	Safety assembly	
2	Heating water inlet (return)	Rp 1″ internal thread
3	Heating water outlet (supply)	Rp 1″ internal thread
4	Control panel	
5	Draining for buffer tank	G 1/2″
6	Heating water inlet (from heat pump)	Rp 1″ internal thread
7	Heating water outlet (to heat pump)	Rp 1″ internal thread
8	Domestic hot water	R 1″ external thread
9	Circulation	R 3/4″ external thread
10	Cold water	R 1″ external thread
11	Bushings for electrical/sensor cables	

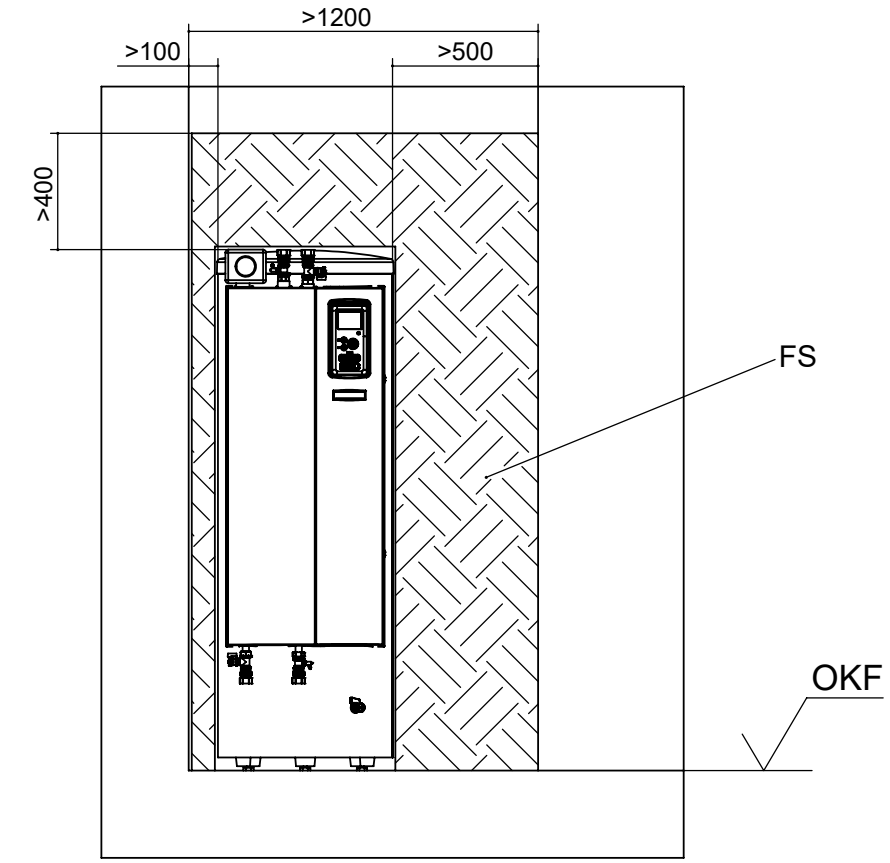

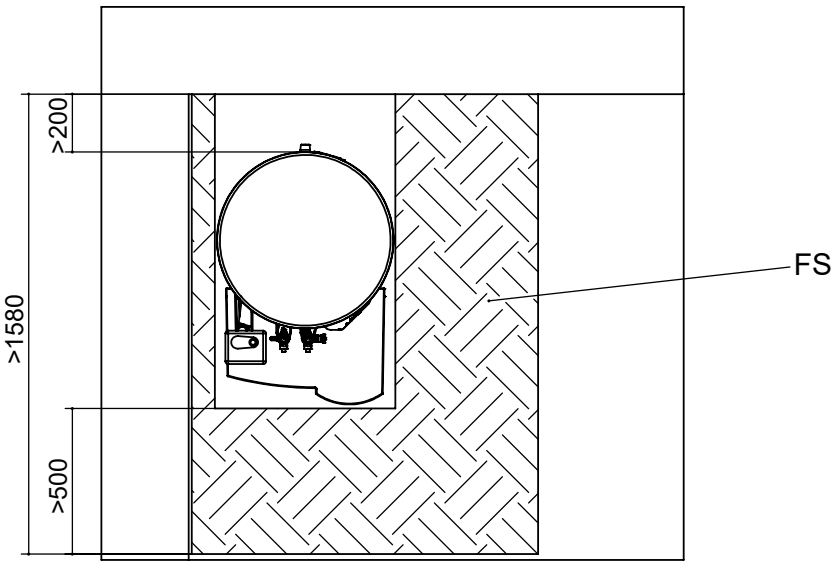

Key: UK819516
All dimensions in mm.

Item	Name
FS	Free space for service purposes
OKF	Top edge of finished floor

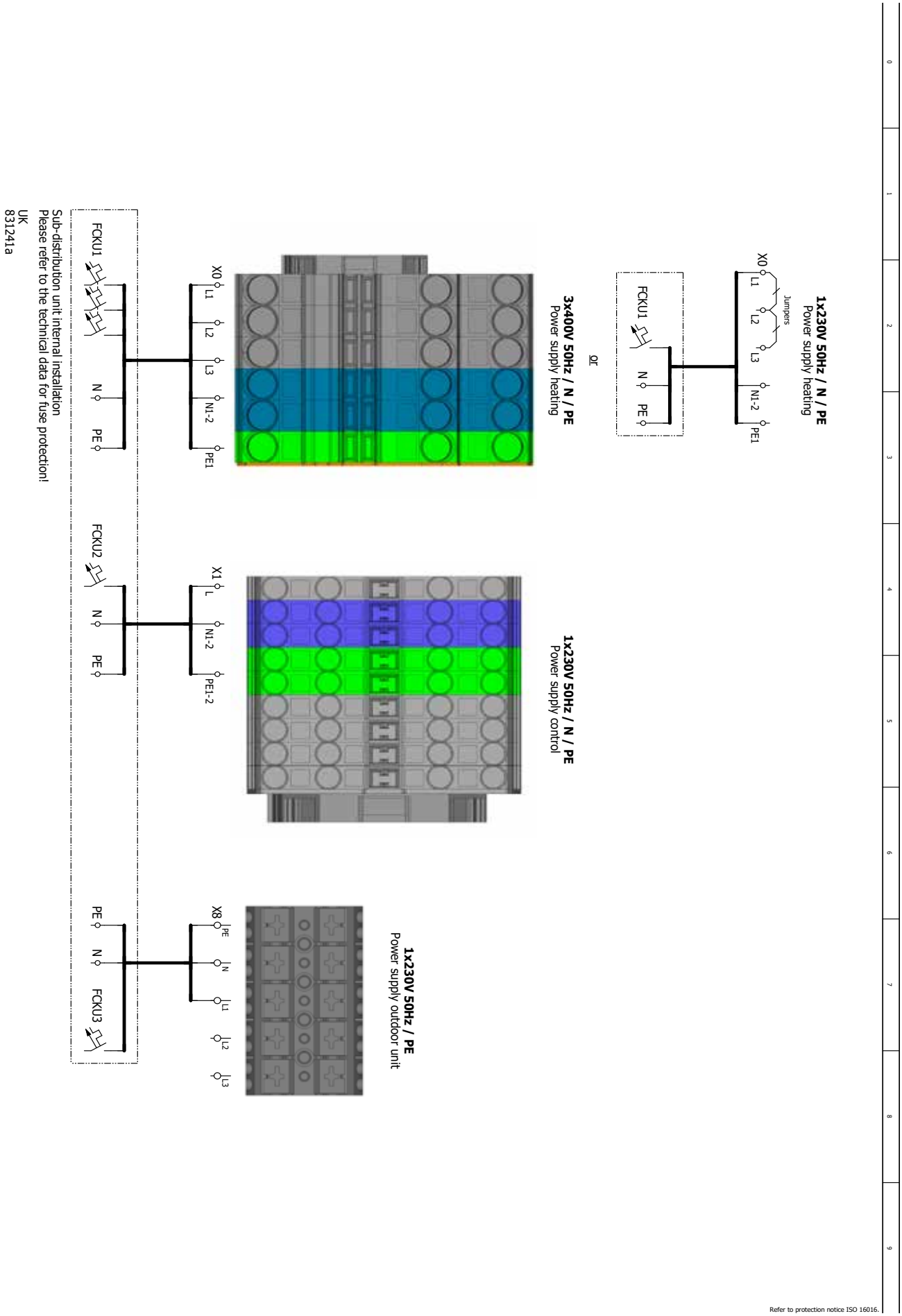
1x230V 50Hz / N / PE
Power supply heating
Jumpers
X0
L1
L2
L3
N1-2
PE1
FCKU1
N
PE
or
3x400V 50Hz / N / PE
Power supply heating
X0
L1
L2
L3
N1-2
PE1
FCKU1
N
PE
1x230V 50Hz / N / PE
Power supply control
X1
L
N1-2
PE1-2
FCKU2
N
PE
1x230V 50Hz / PE
Power supply outdoor unit
X8
PE
N
L1
L2
L3
PE
N
FCKU3
Sub-distribution unit internal installation
Please refer to the technical data for fuse protection!
UK
831241a
Refer to protection notice ISO 16016.

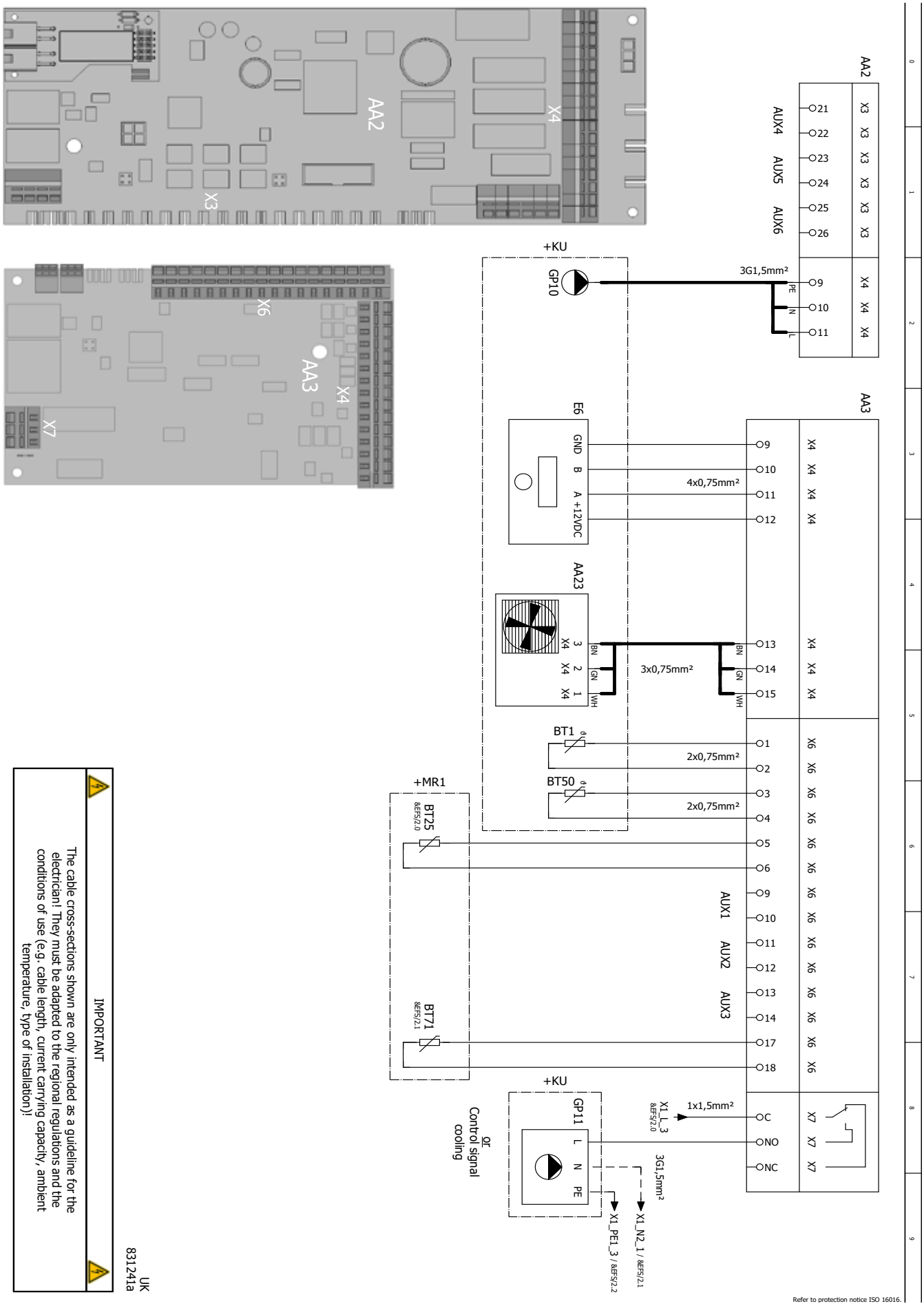

IMPORTANT

The cable cross-sections shown are only intended as a guideline for the electrician! They must be adapted to the regional regulations and the conditions of use (e.g. cable length, current carrying capacity, ambient temperature, type of installation)!

UK
831241a

UK 831241a

Equipement	Description	Wired
AA2	PCA Base	
AA3	PCA Input	
AA23	Communication outdoor unit	
AUX1-6	Inputs/outputs	
BT1	Outdoor sensor	
BT25	Temperature sensor supply	X
BT50	Room temperature sensor	
BT71	Temperature sensor return hot water	X
E6	Room control unit	(Option)
FCKU1	Circuit breaker heating	
FCKU2	Circuit breaker control	
FCKU3	Circuit breaker outdoor unit	
GP10	Heating pump	(Option)
GP11	Circulation pump	(Option)
X0	Power supply heating	
X1	Terminal control	
X8	Power supply outdoor unit	
+KU	On site at the customer	
+MR1	Machine room	

Refer to protection notice ISO 16016.

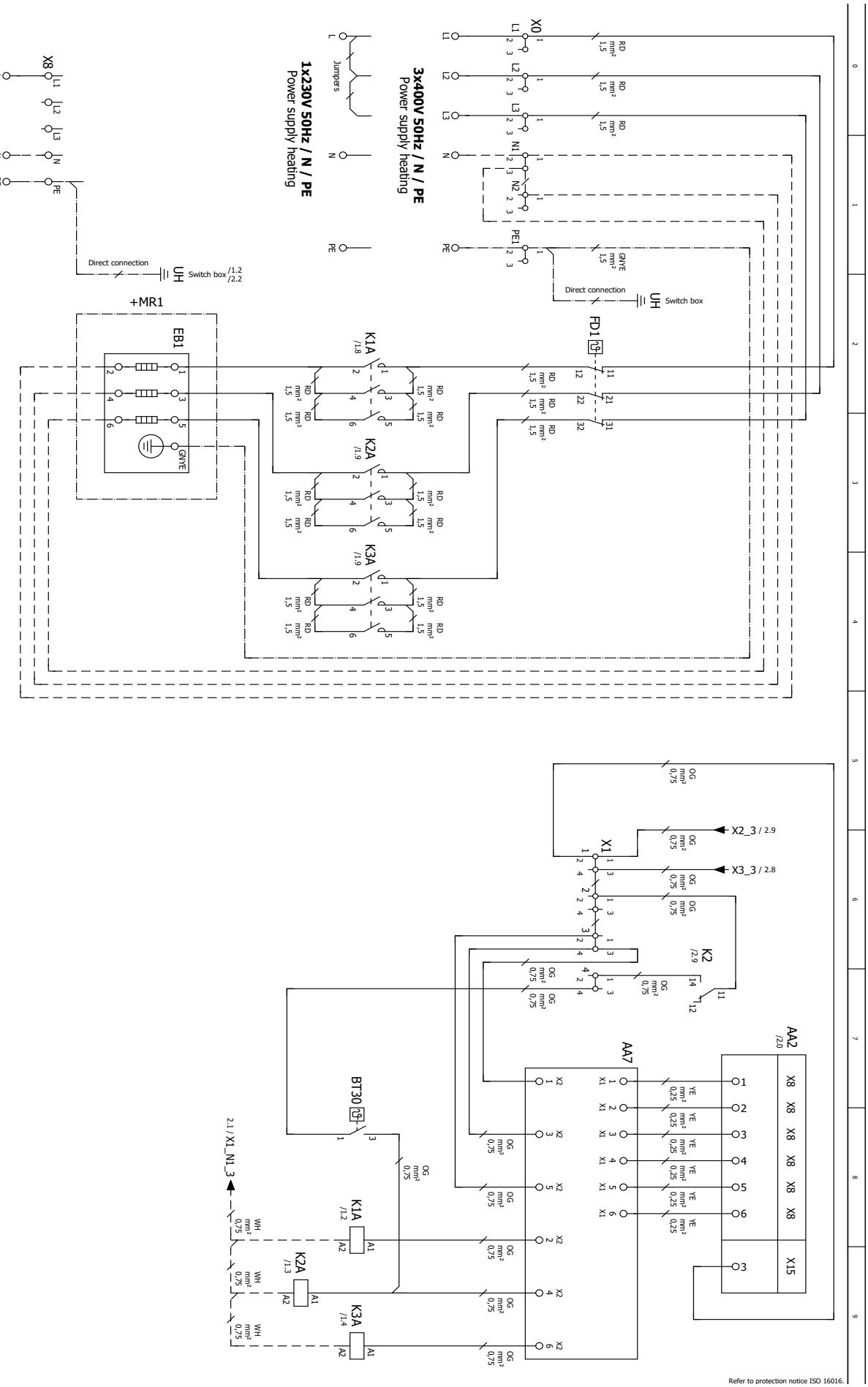
3x400V 50Hz / N / PE
Power supply heating
1x230V 50Hz / N / PE
Power supply heating
1x230V 50Hz / N / PE
Power supply outdoor unit
UK
817465a
Jumpers
Direct connection
Switch box
+MR1
EB1
FD1
K1A
K2A
K3A
X0
X8
X1
K2
AA2
AA7
BT30
X2_3 / 2.9
X3_3 / 2.8
2.1 / X1_N1_3
Refer to protection notice ISO 16016.

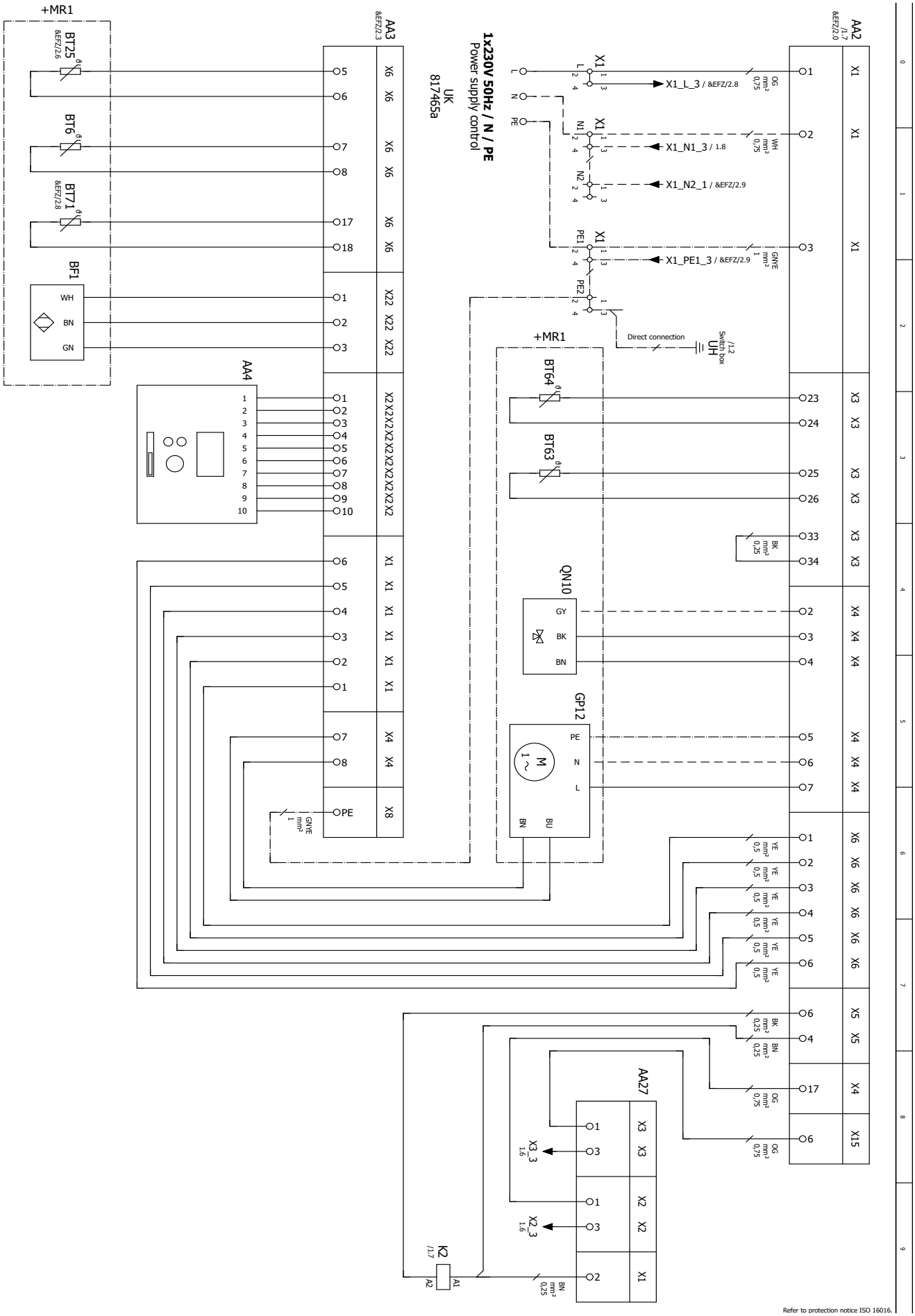
1x230V 50Hz / N / PE
Power supply control
UK
817465a
AA2
AA3
AA4
AA27
+MR1
BT25
BT6
BT71
BF1
BT64
BT63
QN10
GP12
X1
X2
X3
X4
X5
X6
X8
X15
K2
UH
Switch box
Direct connection
X1_L_3 / &EFZ/2.8
X1_N1_3 / 1.8
X1_N2_1 / &EFZ/2.9
X1_PE1_3 / &EFZ/2.9
X3_3
X2_3
Refer to protection notice ISO 16016.

Circuit diagrams key

UK 817465a

Equipement	Description
AA2	PCA Base
AA3	PCA Input
AA4	Control unit
AA7	Heating regulator
AA27	Relay card
BF1	Flow sensor
BT6	Temperature sensor domestic hot water
BT25	Temperature sensor supply
BT30	Temperature switch
BT63	Temperature sensor supply after el.rod.
BT64	Temperature sensor cooling circuit
BT71	Temperature sensor return hot water
EB1	Heating
FD1	Safety temperature limiter
GP12	Heating pump
K1A	Contactor heating
K2A	Contactor heating
K3A	Contactor heating
K2	Alarm relay
QN10	Mixing valve supply
X0	Power supply heating
X1	Terminal control
X8	Power supply compressor
+MR1	Machinery room

UK

ait-deutschland GmbH
Industriestraße 3
D-95359 Kasendorf

E info@alpha-innotec.de
W www.alpha-innotec.de

alpha innotec – an ait-deutschland GmbH brand